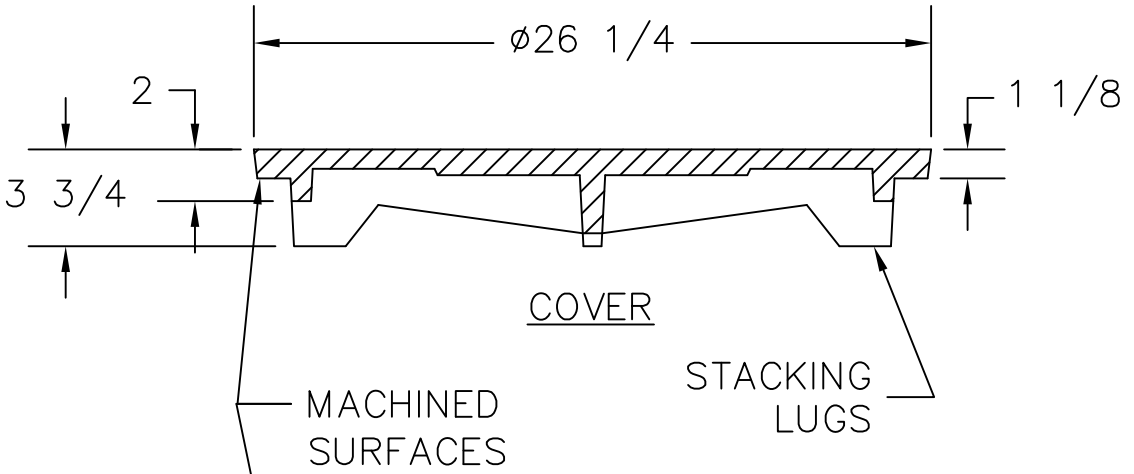

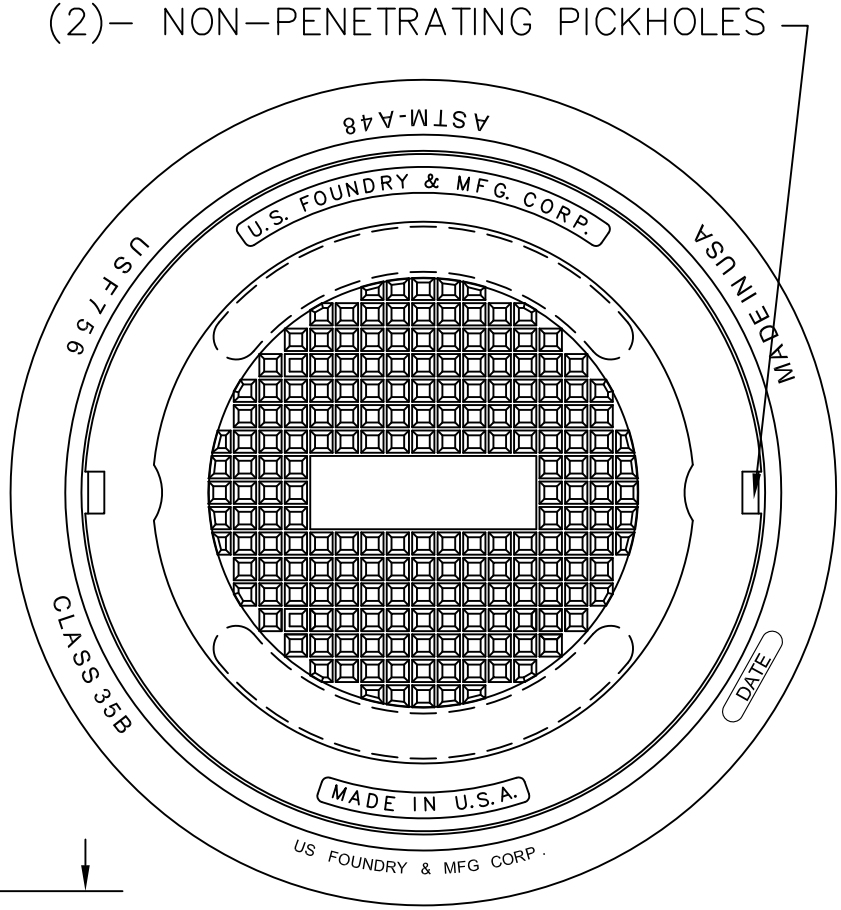

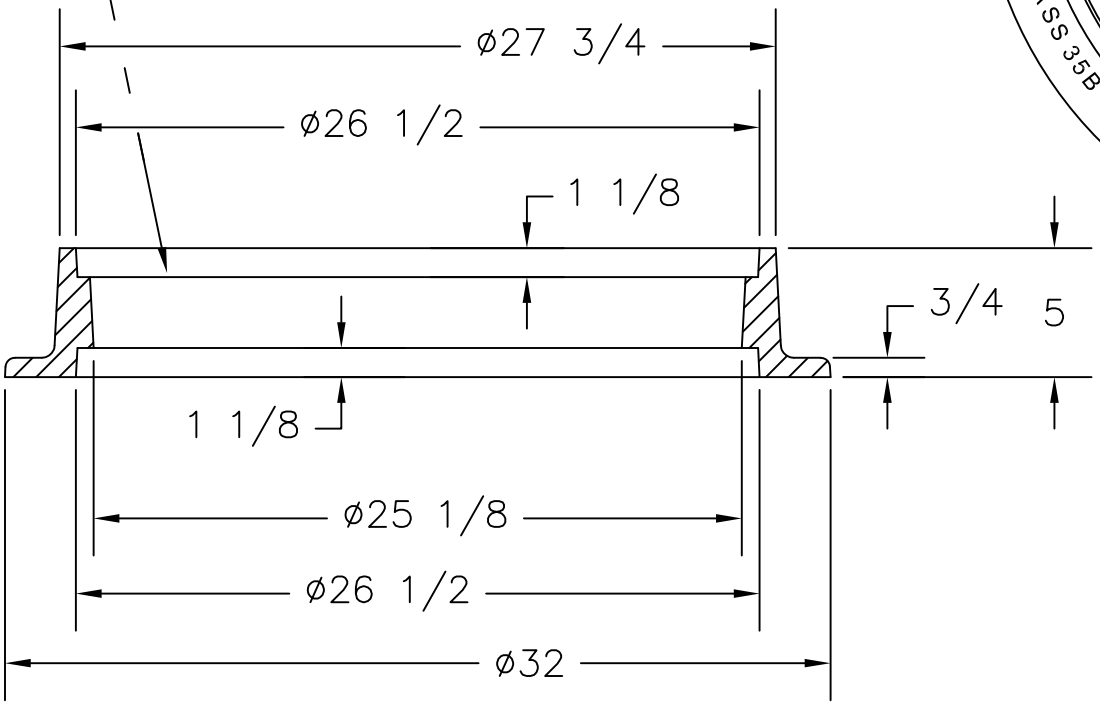

REVERSIBLE RING

US FOUNDRY & MFG. CORP.
8351 NW 93rd Street, Medley, FL 33166-2025
ph: 1-800-432-9709; fax: 305-887-9429
www.usfoundry.com
© 2010 US Foundry & Mfg. Corp. All Rights Reserved

USF 756 RING & LG COVER

LOAD CLASSIFICATION: Heavy Duty				
MATERIAL: ASTM–A48 GRAY IRON CLASS35B				
Ring No:	8020508	WGHT:	155	SCALE: 1/8"=1"
Cover No:			150	DATE:
				DWN. BY: ULS/OD
UNLESS OTHERWISE NOTED WEIGHT IS IN POUNDS AND APPROXIMATED				
REV:	DATE:	REV BY:		QUOTE#