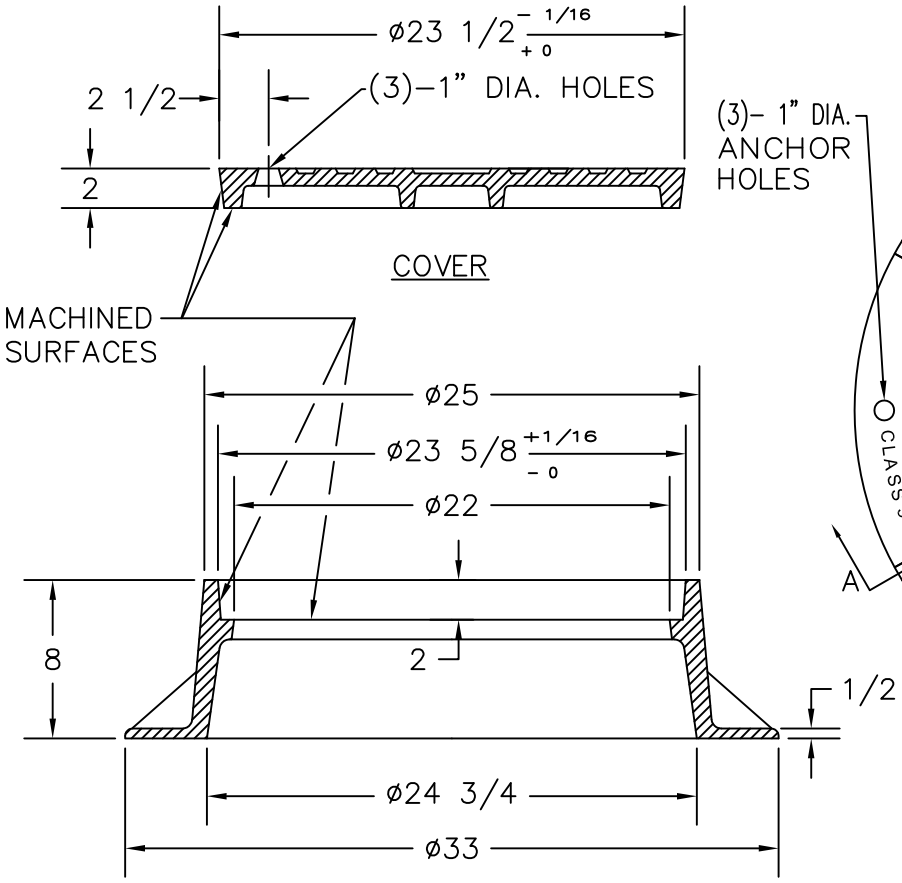

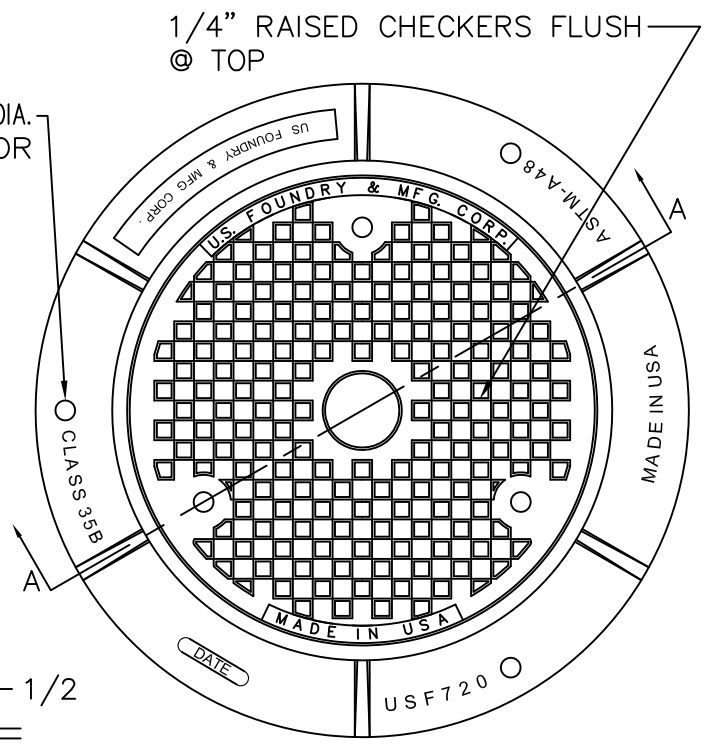

US FOUNDRY & MFG. CORP.
8351 NW 93rd Street, Medley, FL 33166-2025
ph: 1-800-432-9709; fax: 305-887-9429
www.usfoundry.com
© 2010 US Foundry & Mfg. Corp. All Rights Reserved

USF 720 RING & DQ COVER

LOAD CLASSIFICATION: Heavy Duty					
MATERIAL: ASTM−A48 GRAY IRON CLASS35B					
Ring No:	8020117	WGHT:	205	SCALE:	1/8"=1"
Cover No:			115	DATE:	
				DWN. BY:	JWS
UNLESS OTHERWISE NOTED WEIGHT IS IN POUNDS AND APPROXIMATED					
REV:	DATE:	REV BY:		QUOTE#	