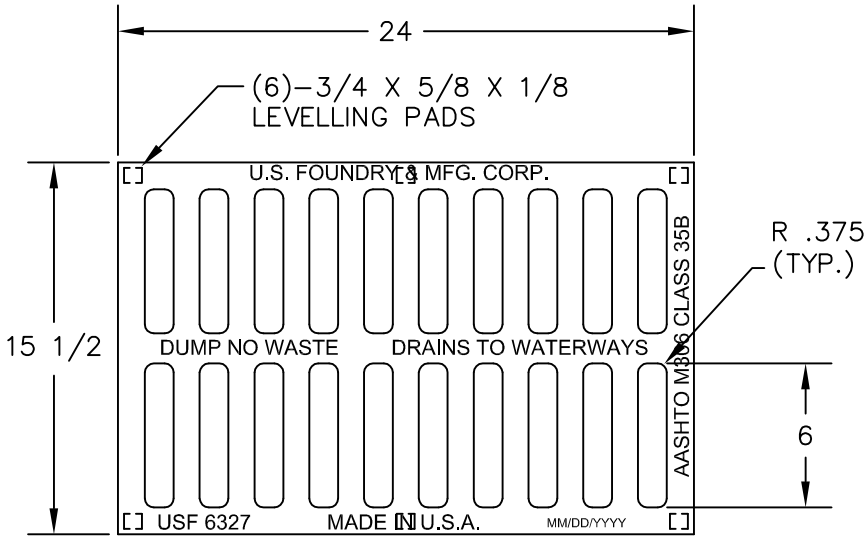

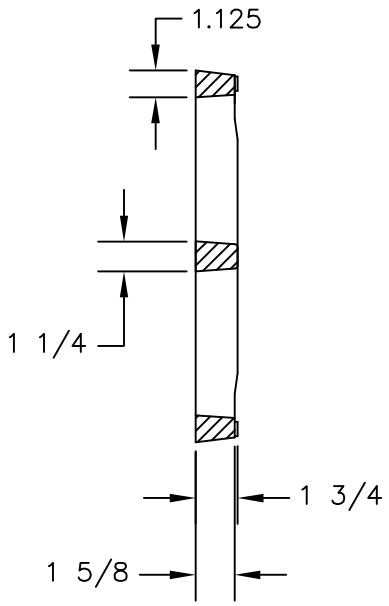

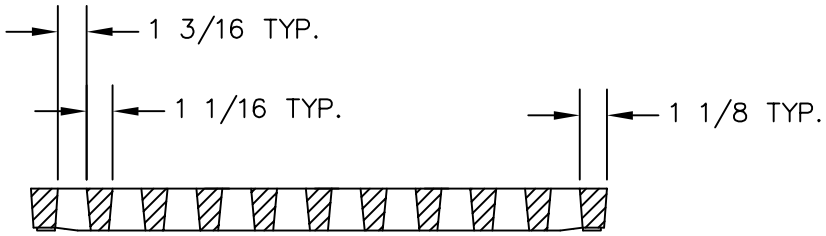

US FOUNDRY & MFG. CORP.
8351 NW 93rd Street, Medley, FL 33166-2025
ph: 1-800-432-9709; fax: 305-887-9429
www.usfoundry.com
© 2011 US Foundry & Mfg. Corp. All Rights Reserved

USF 6327 Grate

LOAD CLASSIFICATION: Heavy Duty				FLOW AREA=138(in²)
MATERIAL: ASTM–A48 GRAY IRON CLASS35B				
		WGHT:		SCALE: 1/8"=1"
Grate No:	8070331		87	DATE: 05–16–11
				DWN. BY: ULS
UNLESS OTHERWISE NOTED WEIGHT IS IN POUNDS AND APPROXIMATED				
REV: 0	DATE: 00–00–00	REV BY:		QUOTE#