THE INFORMATION CONTAINED IN THIS DRAWING IS THE SOLE PROPERTY OF U.S. FOUNDRY & MANUFACTURING CORP. ANY REPRODUCTION IN PART OR AS A WHOLE WITHOUT THE WRITTEN PERMISSION OF U.S. FOUNDRY & MANUFACTURING CORP. IS PROHIBITED. U.S. FOUNDRY & MANUFACTURING CORP. RESERVES THE RIGHT TO MAKE MODIFICATIONS TO DESIGN WITHOUT PRIOR NOTICE. DRAWING IS UNCONTROLLED WHEN PRINTED. WEIGHTS AND DIMENSIONS ARE PROVIDED FOR REFERENCE ONLY **© 2016 US FOUNDRY AN EAGLE MANUFACTURING COMPANY**

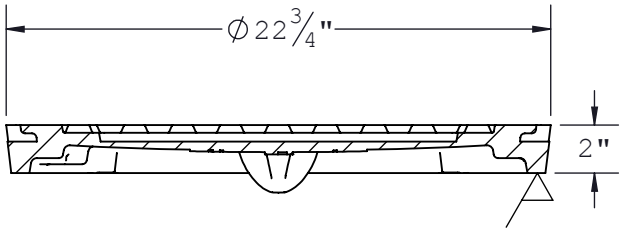

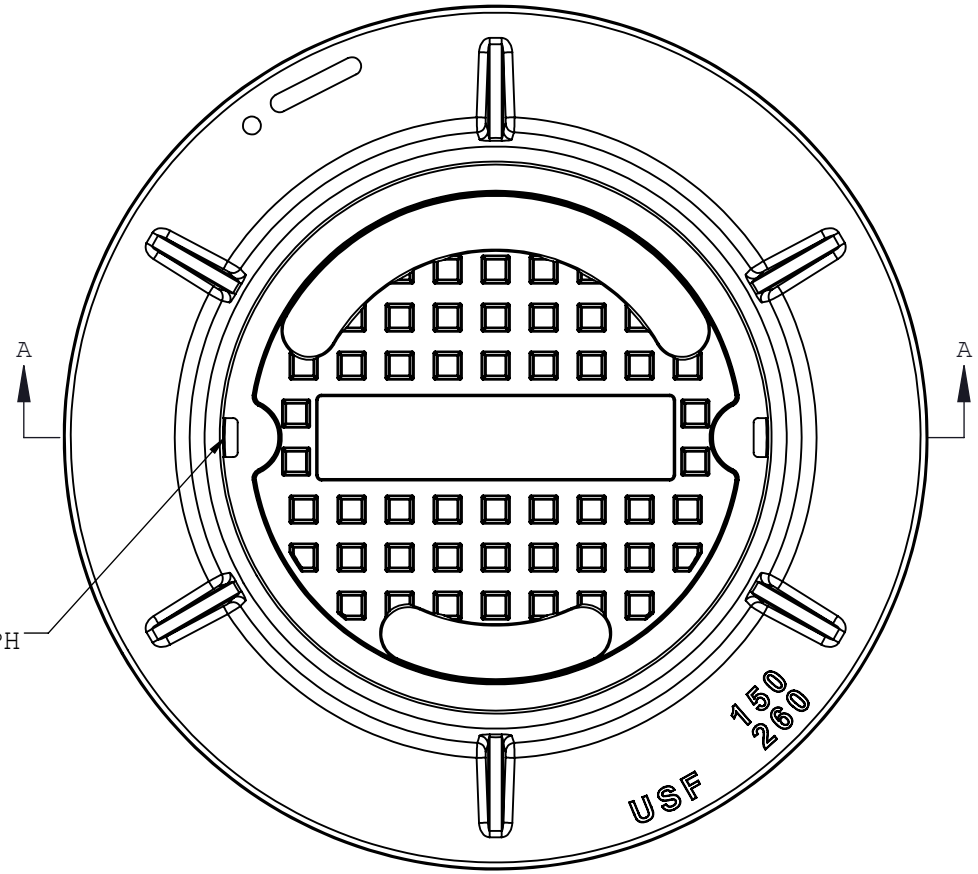

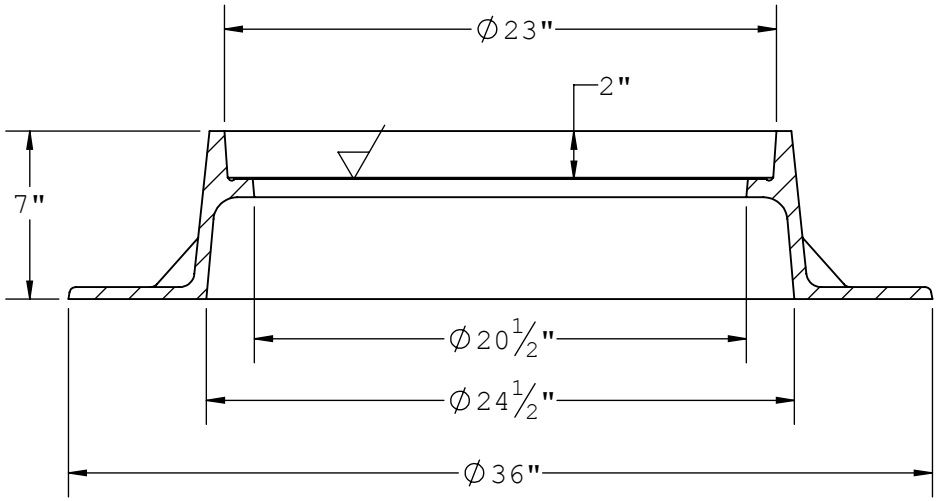

SECTION A-A

US FOUNDRY
AN EAGLE MANUFACTURING COMPANY
8351 NW 93rd Street
Medley, FL, 33166-2025
ph: 1-800-432-9709
fax: 305-887-9429
www.usfoundry.com
© 2016 All Rights Reserved

USF 150 Ring & G Cover

LOAD CLASSIFICATION:	Heavy Duty	
MATERIAL:	Gray Cast Iron	ASTM-A48 Class 35B
ITEM:	BAAN #	DRAWING
		DATE 12/14/2016
		DRAWN BY ULS

REV	DATE	REV BY	QUOTE #
0			

Customer Drawing